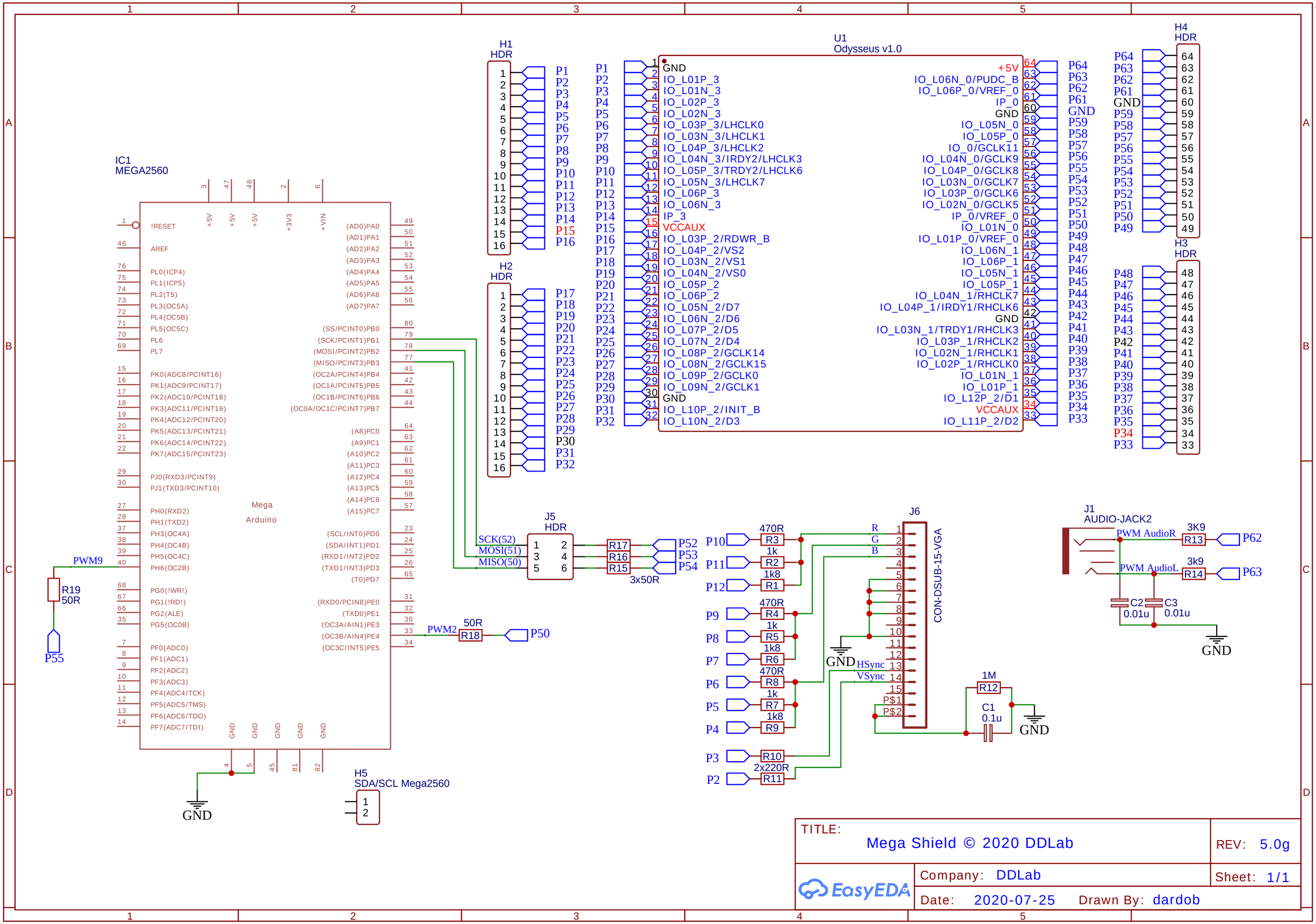
IC1
MEGA2560
Mega
Arduino
H1
HDR
H2
HDR
U1
Odysseus v1.0
H4
HDR
H3
HDR
J5
HDR
SCK(52)
MOSI(51)
MISO(50)
R17
R16
R15
3x50R
P52
P53
P54
PWM9
R19
50R
P55
PWM2
50R
R18
P50
GND
H5
SDA/SCL Mega2560
J6
CON-DSUB-15-VGA
HSync
VSync
470R
R3
1k
R2
1k8
R1
470R
R4
1k
R5
1k8
R6
470R
R8
1k
R7
1k8
R9
R10
2x220R
R11
1M
R12
C1
0.1u
J1
AUDIO-JACK2
PWM AudioR
PWM AudioL
3K9
R13
3k9
R14
C2
0.01u
C3
0.01u
TITLE:
Mega Shield © 2020 DDLab
REV: 5.0g
Company: DDLab
Sheet: 1/1
Date: 2020-07-25
Drawn By: dardob
EasyEDA