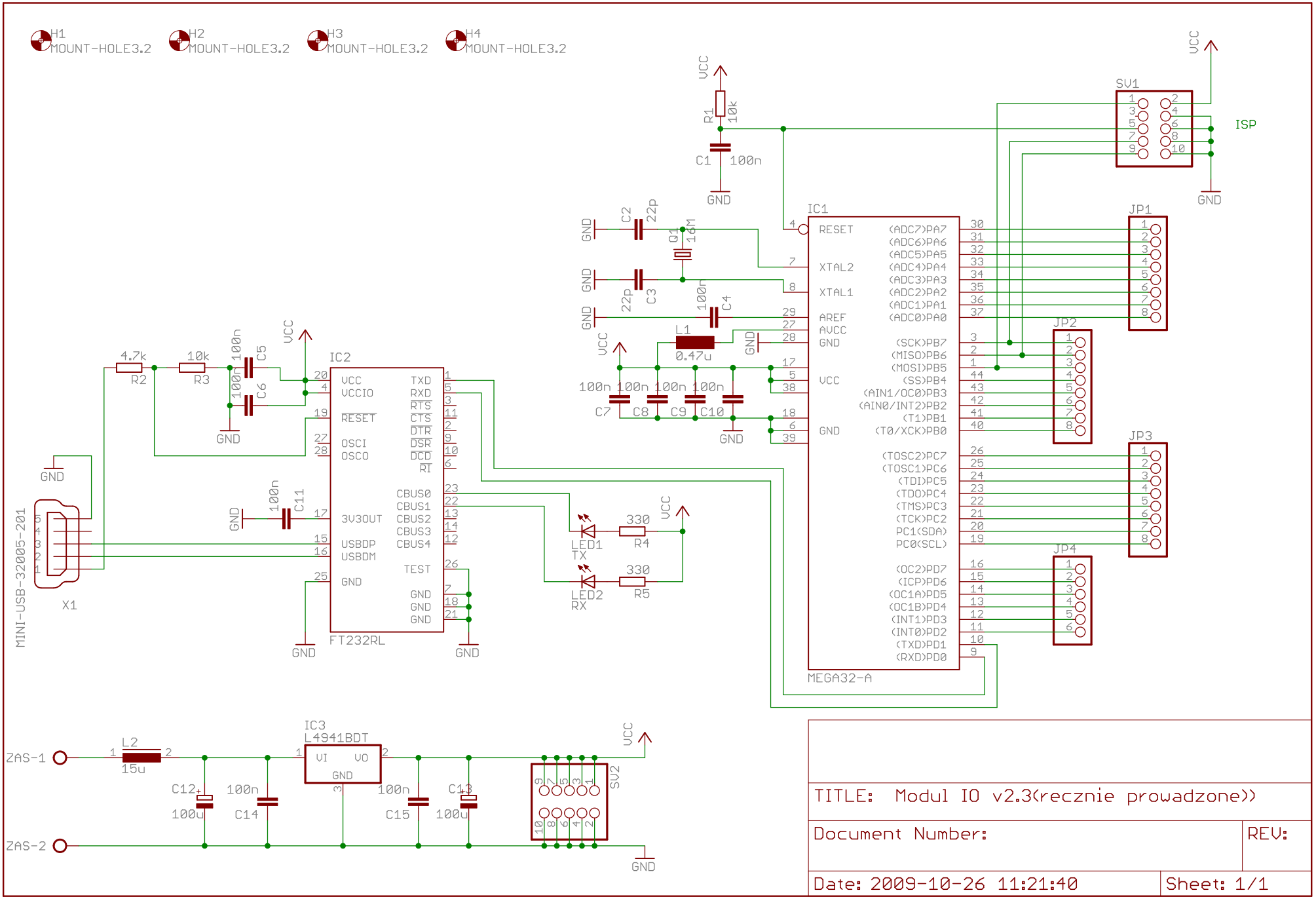
H1 MOUNT-HOLE3.2
H2 MOUNT-HOLE3.2
H3 MOUNT-HOLE3.2
H4 MOUNT-HOLE3.2
VCC
R1 10k
C1 100n
GND
SV1
ISP
IC1
RESET
XTAL2
XTAL1
AREF
AVCC
GND
VCC
GND
(ADC7)PA7
(ADC6)PA6
(ADC5)PA5
(ADC4)PA4
(ADC3)PA3
(ADC2)PA2
(ADC1)PA1
(ADC0)PA0
(SCK)PB7
(MISO)PB6
(MOSI)PB5
(SS)PB4
(AIN1/OC0)PB3
(AIN0/INT2)PB2
(T1)PB1
(T0/XCK)PB0
(TOSC2)PC7
(TOSC1)PC6
(TDI)PC5
(TDO)PC4
(TMS)PC3
(TCK)PC2
PC1(SDA)
PC0(SCL)
(OC2)PD7
(ICP)PD6
(OC1A)PD5
(OC1B)PD4
(INT1)PD3
(INT0)PD2
(TXD)PD1
(RXD)PD0
MEGA32-A
JP1
JP2
JP3
JP4
C2 22p
C3 22p
Q1 16M
C4 100n
L1 0.47u
C7 100n
C8 100n
C9 100n
C10 100n
IC2
VCC
VCCIO
RESET
OSCI
OSCO
3V3OUT
USBDP
USBDM
GND
TXD
RXD
RTS
CTS
DTR
DSR
DCD
RI
CBUS0
CBUS1
CBUS2
CBUS3
CBUS4
TEST
FT232RL
R2 4.7k
R3 10k
C5 100n
C6 100n
C11 100n
X1
MINI-USB-32005-201
LED1 TX
LED2 RX
R4 330
R5 330
IC3
L4941BDT
VI
VO
GND
L2 15u
ZAS-1
ZAS-2
C12 100u
C14 100n
C15 100n
C13 100u
SV2
TITLE: Modul IO v2.3(recznie prowadzone))
Document Number:
REV:
Date: 2009-10-26 11:21:40
Sheet: 1/1