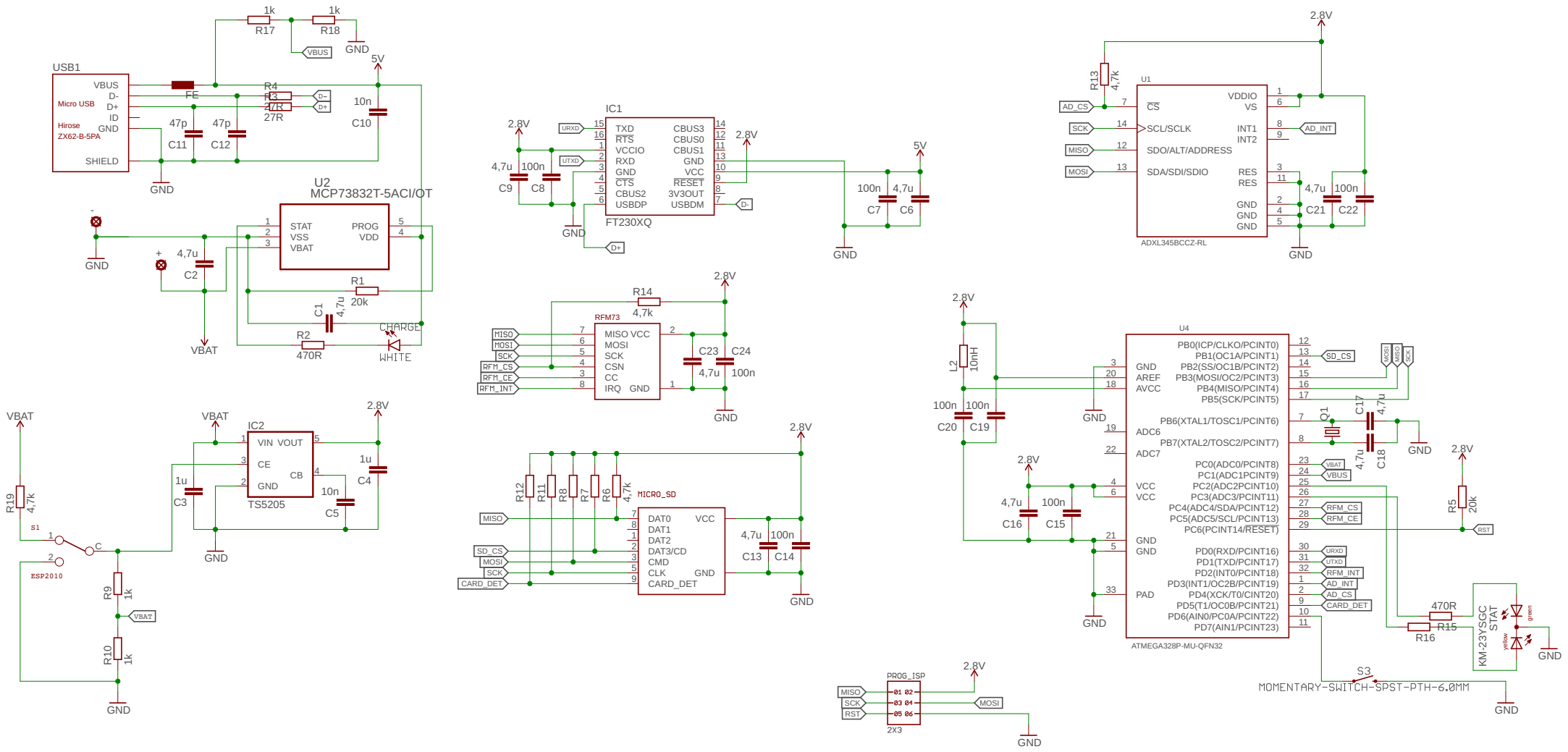
USB1
Micro USB
Hirose
ZX62-B-5PA
VBUS
D-
D+
ID
GND
SHIELD
FE
R17
R18
1k
VBUS
GND
5V
R4
R3
27R
10n
C10
47p
C11
C12
U2
MCP73832T-5ACI/OT
STAT
VSS
VBAT
PROG
VDD
4,7u
C2
R1
20k
C1
R2
470R
CHARGE
WHITE
IC1
FT230XQ
TXD
RTS
VCCIO
RXD
GND
CTS
CBUS2
USBDP
CBUS3
CBUS0
CBUS1
GND
VCC
RESET
3V3OUT
USBDM
URXD
UTXD
2.8V
C9
C8
C7
C6
U1
ADXL345BCCZ-RL
CS
SCL/SCLK
SDO/ALT/ADDRESS
SDA/SDI/SDIO
VDDIO
VS
INT1
INT2
RES
AD_CS
SCK
MISO
MOSI
AD_INT
R13
C21
C22
RFM73
MISO VCC
MOSI
SCK
CSN
CC
IRQ GND
R14
C23
C24
RFM_CS
RFM_CE
RFM_INT
IC2
TS5205
VIN VOUT
CE
CB
GND
1u
C3
C4
C5
R19
S1
ESP2010
R9
R10
MICRO_SD
DAT0
DAT1
DAT2
DAT3/CD
CMD
CLK
CARD_DET
R12
R11
R8
R7
R6
C13
C14
SD_CS
CARD_DET
U4
ATMEGA328P-MU-QFN32
PB0(ICP/CLKO/PCINT0)
PB1(OC1A/PCINT1)
PB2(SS/OC1B/PCINT2)
PB3(MOSI/OC2/PCINT3)
PB4(MISO/PCINT4)
PB5(SCK/PCINT5)
PB6(XTAL1/TOSC1/PCINT6)
PB7(XTAL2/TOSC2/PCINT7)
PC0(ADC0/PCINT8)
PC1(ADC1PCINT9)
PC2(ADC2PCINT10)
PC3(ADC3/PCINT11)
PC4(ADC4/SDA/PCINT12)
PC5(ADC5/SCL/PCINT13)
PC6(PCINT14/RESET)
PD0(RXD/PCINT16)
PD1(TXD/PCINT17)
PD2(INT0/PCINT18)
PD3(INT1/OC2B/PCINT19)
PD4(XCK/T0/CINT20)
PD5(T1/OC0B/PCINT21)
PD6(AIN0/PC0A/PCINT22)
PD7(AIN1/PCINT23)
GND
AREF
AVCC
ADC6
ADC7
VCC
PAD
L2
10nH
C20
C19
C16
C15
Q1
C17
C18
R5
20k
RST
R15
R16
470R
KM-23YSGC
STAT
yellow
green
S3
MOMENTARY-SWITCH-SPST-PTH-6.0MM
PROG_ISP
2X3
MISO
SCK
RST
MOSI