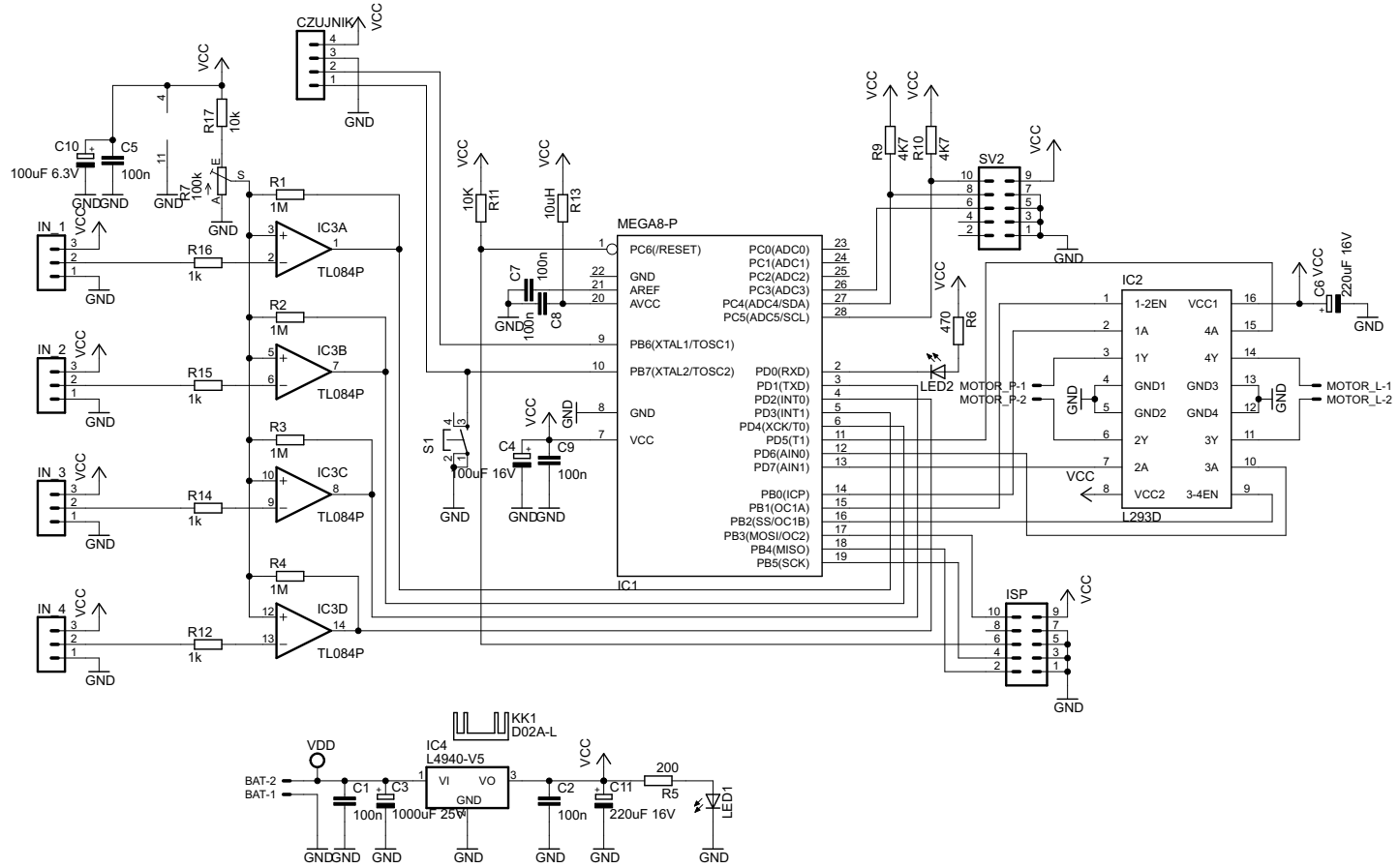

	Jan Gajos
	minisumo_ver2
	2010-09-14 16:03:49
	Sheet: 1/1